产品规格承认书

SPECIFICATION FOR APPROVAL

客户名称 ： **CUSTOMER NAME：**	

产品品名（**Type Name**）:	SMI2244 32GB MSATA 固态硬盘
产品料号（**Part No**）:	**2244LT 32GB**
产品型号（**Product Model**）:	**InM2244S2/32G**

承认章 **APPROVAL BY：**	

承认日期 **APPROVAL DATE：**	

Table of Contents

1 General Description 3
1.1 Feature 3
1.2 Block Diagram 4
1.3 Capacity characteristic parameters 4
1.4 Supply Voltage 4
1.5 System Power Consumption 4
1.6 System Reliability 5
1.7 Environmental Specifications 5
2 Performance characteristic parameters 5
2.1 ATTO Disk Benchmark 5
2.2 CrystalDiskMark 6
3 Support ATA Command 7
4 Product appearance and dimensions 9
4.1 Physical Specifications 9
5 Electrical Interface Specification 11
5.1 SATA Interface Connector 10
5.2 Pin Assignments 10
6 Ordering Information 11
7 Special note 12
8 Packaging specification 12

1 General Description

The standard **InM2244S2/32G** form factor Serial Solid State Drive (SSD) is fully consists of semiconductor devices using NAND Flash Memory which provide high reliability and high performance for a storage media. The SSD doesn't have any moving parts such as platter (disk) and head media, which provides a better solution in a notebook PC and Tablet PC as a storage device providing higher performance, reduced latencies, and a low power consumption in a small form factor. The SSD could also provide rugged features in industrial PC with an extreme environment with a high MTBF.

1.1 Feature

- Capacity: 32**GB**
- SDRAM: Supports one module DDR3 up-to 4Gbits,standard 2Gbits
- Sequential Data Read/Write Performance (Up to):**201.9/82.04MB/s**
- Form factor: according to **InM2244S2/32G**
- Interface: SATA 1.5 / 3.0 Gb/s
- Fully compliant with SATA revision**2.0**, compatible with SATA 1.5/ 3.0Gb/s interface rates
- Support **ATA-7** Command Set
- PIO, DMA, UDMA(up to 6, dependant on host) supported
- Asynchronous Signal Recovery
- Commercial operating temperature range form 0℃ to +70℃
- Flash management algorithm: global static and dynamic wear-leveling, bad block management algorithm
- Supports ATA and SATA Interface power management and SMART (Self-Monitoring, Analysis and Reporting Technology)
- ECC (Error Correction Code): **Supports BCH 66-bits/1KB ECC.**
- Read endurance: unlimited
- Data retention: 10 years
- MTBF:1,500,000 Hours

1.2 Block Diagram

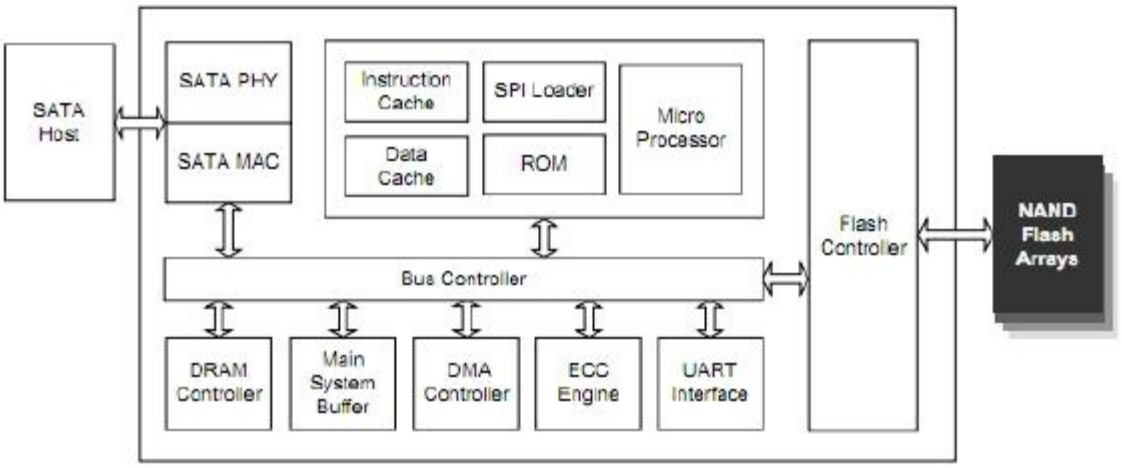

1.3 Capacity characteristic parameters

Part No.	Capacity	Cylinder	Head	Sector/Trace	Total number of sectors（512/Sector）	Total number of bytes
2244LT 32G	32GB	3850	255	63	61865984	31675383808

1.4 Supply Voltage

Item	Requirements
Allowable voltage	5.0V ± 10%
Allowable noise/ripple	100mV p-p or less

1.5 System Power Consumption

Power	2244LT 32G
Unformatted Capacity	32GB
Active (W)	0.95
Idle (W)	0.45

1.6 System Reliability

Item	Typical(Hours)
MTBF	1,500,000

1.7 Environmental Specifications

Features	Operating	Non-Operating
Temperature	0℃ to +70℃	-55℃ to +95℃
Humidity	5% to 95%, non-condensing	
Vibration	20G Peak, 10~2000Hz, (15mins/Axis) x3Axis	
Shock	1500G, duration 0.5ms, Half Sine Wave	

2 Performance characteristic parameters

2.1 ATTO Disk Benchmark

Test Results Summery:

Part No.	Capacity	Firmware Version	Read/Write Speed(Mbytes/second)			
			ATTO Disk Benchmark			
			0.5KB	4KB	512K	8M
2244LT 32G	32GB	825	6.49/3.42	50.69/28.24	206.48/81.71	206.88/79.89

Test results screenshot:

2.2 CrystalDiskMark

Test Results Summery:

Part No.	Capacity	Firmware Version	Read/Write Speed(Mbytes/second)			
			CrystalDiskMark3.0			
			Seq	512K	4K	4K QD32
2244LT 32G	32GB	825	201.9/82.04	183.3/37.84	13.07/1.250	15.07/1.047

Test results screenshot:

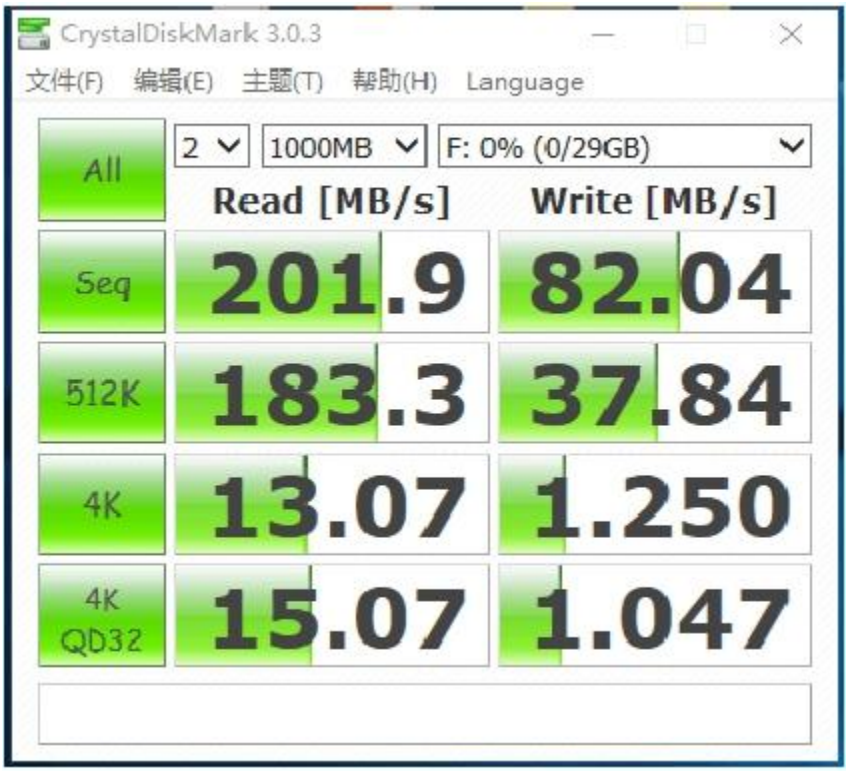

Note:

1. Test platform : INTEL Core i5-3550, ASUS P8Z77-V LX ,4GB DDR3 1600, Windows 7 SP1
2. Test data depending on the software / hardware platform, is for reference only, not as a business or contract offer.

3 Support ATA Command

Command Name	Code	PARAMETERS USED					
		SC	SN	CY	DR	HD	FT
CHECK POWER MODE	E5h	O	X	X	O	X	X
DEVICE CONFIGURATION OVERLAY	B1h	X	X	X	O	X	O
EXECUTE DIAGNOSTICS	90h	X	X	X	O	X	X
FLUSH CACHE	E7h	X	X	X	O	X	X
FLUSH CACHE EXT	EAh	X	X	X	O	X	X
IDENTIFY DEVICE	ECh	X	X	X	O	X	X
IDLE	E3h	O	X	X	O	X	X

NOP	00h	F	F	F	O	X	X
INITIALIZE DEVICE PARAMETERS	91h	O	X	X	O	O	X
READ BUFFER	E4h	X	X	X	O	X	X
READ DMA	C8h or C9h	O	O	O	O	O	X
READ DMA EXT	25h	O	O	O	O	O	X
READ LOG EXT	2Fh	O	O	O	O	O	O
READ MULTIPLE	C4h	O	O	O	O	O	X
READ MULTIPLE EXT	29h	O	O	O	O	O	X
READ NATIVE MAX ADDRESS	F8h	X	X	X	O	X	X
READ NATIVE MAX ADDRESS EXT	27h	X	X	X	O	X	X
READ SECTOR(S)	20h or 21h	O	O	O	O	O	X
READ SECTOR(S) EXT	24h	O	O	O	O	O	X
READ VERIFY SECTOR(S)	40h or 41h	O	O	O	O	O	X
READ VERIFY SECTOR(S) EXT	42h	O	O	O	O	O	X
RECALIBRATE	10h	X	X	X	O	X	X
SECURITY DISABLE PASSWORD	F6h	X	X	X	O	X	X
SECURITY ERASE PREPARE	F3h	X	X	X	O	X	X
SECURITY ERASE UNIT	F4h	X	X	X	O	X	X
SECURITY FREEZE LOCK	F5h	X	X	X	O	X	X
SECURITY SET PASSWORD	F1h	X	X	X	O	X	X
SECURITY UNLOCK	F2h	X	X	X	O	X	X
SEEK	7xh	X	X	O	O	O	X
SET FEATURES	EFh	O	X	X	O	X	O
SET MAX	F9h	O	O	O	O	O	O
SET MAX ADDRESS EXT	37h	O	O	O	O	O	X
SET MULTIPLE MODE	C6h	O	X	X	O	X	X
SLEEP	E6h	X	X	X	O	X	X
SMART	B0h	X	X	O	O	X	O
STANDBY	E2h	X	X	X	O	X	X
STANDBY IMMEDIATE	E0h	X	X	X	O	X	X
WRITE BUFFER	E8h	X	X	X	O	X	X
WRITE DMA	CAh or CBh	O	O	O	O	O	X
WRITE DMA EXT	35h	O	O	O	O	O	X
WRITE DMA FUA EXT	3Dh	O	O	O	O	O	X
WRITE LOG EXT	3Fh	O	O	O	O	O	X
WRITE MULTIPLE	C5h	O	O	O	O	O	X
WRITE MULTIPLE EXT	39h	O	O	O	O	O	X

WRITE MULTIPLE FUA EXT	CEh	O	O	O	O	O	X
WRITE SECTOR(S)	30h or 31h	O	O	O	O	O	X
WRITE SECTOR(S) EXT	34h	O	O	O	O	O	X
WRITE VERIFY	3Ch	O	O	O	O	O	O

4 Product appearance and dimensions

4.1 Physical Specifications

Part No.	Length (mm)	Width (mm)	Height (mm)
2244LT 32G	50.00 ± 0.25	30.00 ± 0.25	3.0 ± 0.25

4.2 Product appearance of figure

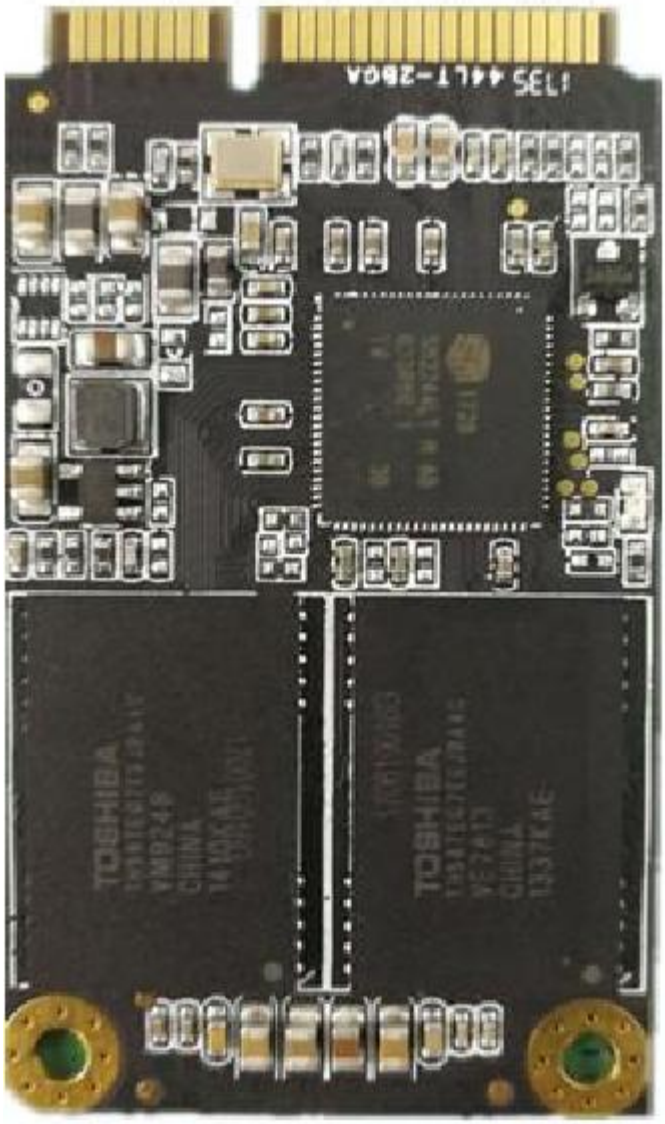

5 Electrical Interface Specification

5.1 mSATA Interface Connector

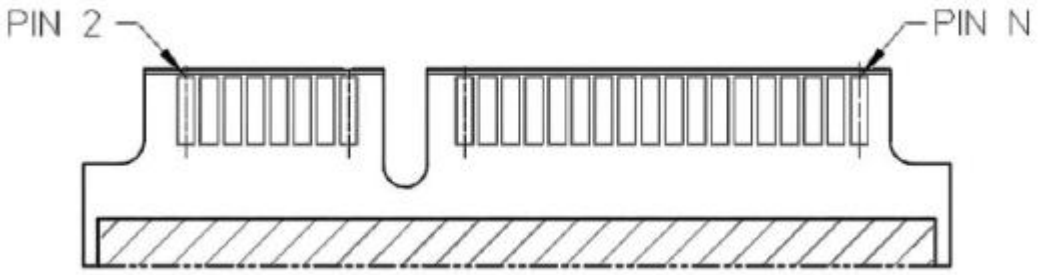

5.2 Pin Assignments

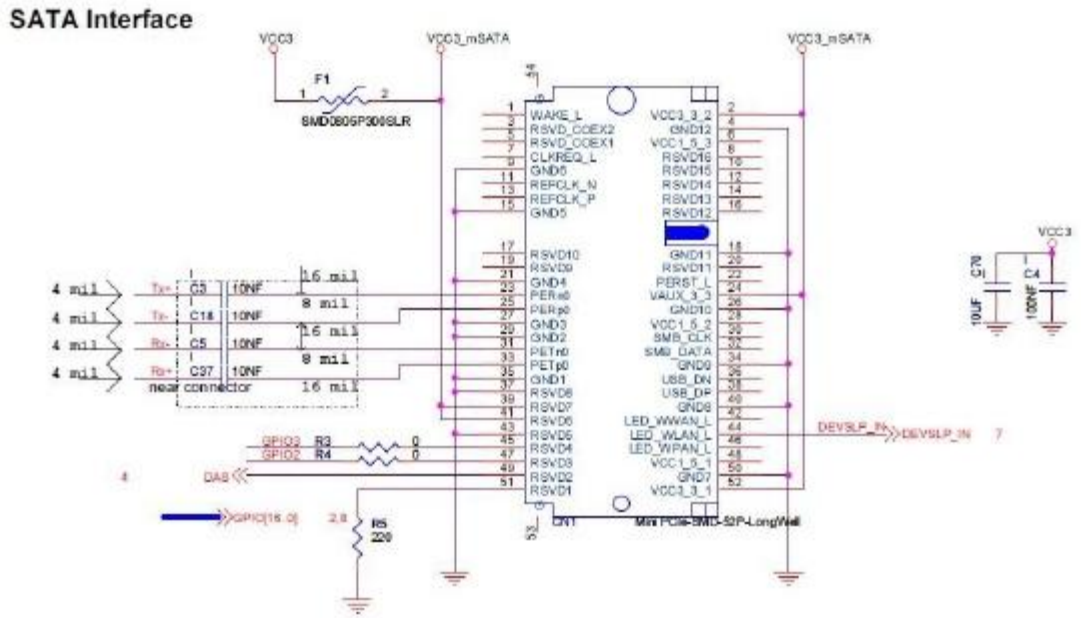

6 Ordering Information

PART No.	Physical Capacity	FlashType/number
2244LT 32G	32GB	MLC/16GB*2

7 Special note

1. Capacity calculation rule is, 1GB is equivalent to1000000000 bytes. In Windows operating system, 1GB capacity is defined as 1,073,741,824 bytes, so when the Windows operating system is running, the capacity recognized by the system is smaller than the actual capacity, and the actual available capacity may be different with the different operating systems;
2. Product pictures and size refer to the actual product; power, read and write speed data is for reference only;
3. Data such as power consumption, read and write speed is based on a specific Flash type, capacity, channel number, specific software and hardware conditions tested, and should not be used for business or contract making;
4. We are doing our best to provide you with comprehensive and accurate information as we can, but we are not responsible for errors or omissions in the report that may cause any loss.

8 Packaging specification

1. Products should be packed strictly to relative packing standard as per customer's requirements, make sure products reach the quality guarantee requirements of anti-static, anti-moisture and anti-misleading during warranty and storage period.
2. Package cartons should mark: Supplier name/logo, product model No, specifications, quantity inside, production date, lot No. and order No.
3. Packing and loading as per customer's requirement, details should be discussed by both parties and a sealed sample should be made as standard.